topia:

GO RANGE FAUCET



USER MANUAL

RP: MH2026AUG

Imperial Version

Revision: 02

Table of Contents

1 Introduction

1.1 About this manual

1.1.1 Purpose of the manual Pg. 4

1.1.2 Signal words Pg. 5

1.1.3 Safety symbols Pg. 5

1.1.4 Design of safety instructions Pg. 6

1.1.5 Design of installation / deinstallation step Pg. 6

1.1.6 Design of fault description and solution Pg. 7

1.1.7 Design of technical specification Pg. 7

2 General safety information

2.1 Target groups Pg. 8

2.2 Intended use Pg. 8

2.3 Unintended use Pg. 8

2.4 Limitation of liability Pg. 9

2.5 Safety notes Pg. 10

3 Description of the product

3.1 Function of the product Pg. 13

3.2 Name plate Pg. 14

3.3 Signs attached to the product Pg. 15

4 Transport, handling and storage of the product

4.1 Delivery content Pg. 16

4.2 Packaging Pg. 16

4.3 Transport Pg. 17

4.4 Storage Pg. 17

5 Installation of the product
5.1 Installation requirements Pg. 18
5.2 Installation scheme Pg. 20
5.3 Installation procedure Pg. 22
5.3.1 (A) Prepare the Installation Pg. 22
5.3.2 (B) Install the faucet Pg. 23
6 Operation of the product
6.1 Operation procedure with single lever mixer Pg. 24
6.2 Operation procedure with push-tun knob Pg. 25
6.3 User interface with push-tun knob Pg. 29
6.4 Parameterization via app Pg. 32
7 Maintenance of the product
7.1 Cleaning Pg. 33
7.2 Repairs Pg. 35
8 Removal and disposal of the product
8.1 Removal Pg. 36
8.2 Disposal Pg. 37
9 Troubleshooting Pg. 38
10 Appendices Pg. 40
10.1 Technical data Pg. 41
10.2 Drawing Pg. 42

1 Introduction

1.1 About this manual

1.1.1 Purpose of the manual

This operation manual describes the Multifunctional Faucets for the Topia Go range.

The manual is structured as follows and contains information on the following topics:

- General safety information
- Description of the product
- Transport, handling and storage of the product
- Installation of the product
- Startup and operation of the product
- Maintaining the product
- Removal and disposal of the product
- Troubleshooting
- Appendices

Only use this product in accordance with the intended use as described in section 2.2. Read this manual carefully before using or working with the product in any way. This manual contains all necessary information on safety, transport, assembly, operation and maintenance of the product which are required for safe and proper handling of the machine. Following the instructions helps to avoid hazards, increases the reliability and service life of the product and minimizes the need for repairs.

Keep this manual in a safe place for the entire life of the product and pass it on to any future buyer. As a result of the ongoing improvement of our products and/or systems, illustrations in this document may differ from the appliance as delivered.

1.1.2 Signal words

Signal words inform you about the risk of a hazard. The risk contains information on how serious the consequences of an injury are in connection with a hazard and how likely an injury is to occur.

⚠ WARNING

WARNING indicates a hazardous situation that, if not avoided, could result in death or serious injury.

NOTICE

NOTICE indicates information considered important, but not hazard-related (e.g. messages related to property damage).

1.1.3 Safety symbols

The following symbols are used to indicate different warnings or precautions.

			
General danger	Scalding		

1.1.4 Design of safety instructions

This manual contains safety notes and warning messages that draw your attention to hazards. These notes and messages are structured as follows:

[Symbol]	⚠ SIGNAL WORD
	Description of the safety hazard • What to do to avoid the endangerment.

1.1.5 Design of installation / deinstallation step

1	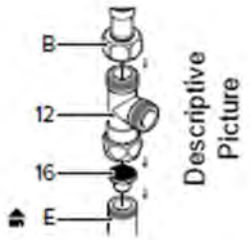	Description of Steps

1.1.6 Design of fault description and solution

Fault	Possible Cause	Solution
Description of fault	Possible cause 1	Action to overcome the fault 1
	Possible cause 2	Action to overcome the fault 2
	Possible cause 3	Action to overcome the fault 3
Next fault description		

1.1.7 Design of technical specification

Name of the group of technical data	
Description	Value unit
Description 2	Value unit Remark unit
Description 3	Description
Examples	
Power Supply	115 V_{AC}
Tap volume chilled	0.45 gal. below 50 °F
Cooling refrigerant	R290

2 General safety information

2.1 Target groups

Being familiar with the contents of this manual is a fundamental prerequisite for protecting persons from danger, avoiding errors and operating the product safely.

This manual is primarily intended to be used by trained installers with adequate training as well as end users. Any person assigned to transport, install, remove, operate, service or maintain the product must have thoroughly read and understood the operation instructions.

2.2 Intended use

- The faucet is designed for indoor use in a private kitchen in households, usually in the kitchen environment. It may also be used in semi-public places, such as a staff kitchen in stores, offices or other business establishments, if the performance limitations are observed.
- The operator is responsible for all cleaning and maintenance requirements.
- Any use beyond the intended use is considered misuse.

2.3 Unintended use

The installation of the Topia Go Range multifunctional faucet is not permitted:

- On uneven or sloping surfaces or in the immediate vicinity of toilets.
- In escape routes.
- In places that make cleaning and maintenance of the unit difficult.
- Outdoors.

2.4 Limitation of liability

The liability for defects will not cover the usual wear and tear or damages which are caused as a result of faulty or careless handling, overuse, unsuitable equipment, or due to special external influences that do not represent the intended use. Furthermore, Topia Water cannot be held liable for damage or injury resulting from the following:

- Improper installation
- Non-compliance with the instructions and safety information in this manual
- Maintenance and/or installation by unqualified personnel
- Improper maintenance
- Unauthorized modifications
- Technical modifications
- Use of spare parts not recommended by the manufacturer
- Use of additional parts not released by the manufacturer

The operator is responsible for the proper installation, maintenance and use of the product. The warranty is void if the product and/or electrical components are damaged by improper assembly, improper use or any other kind of misuse.

2.5 Safety notes



⚠ WARNING

Thermal hazard: There is a risk of burns at discharge temperature greater than 100 °F!

- While dispensing boiling water the outlet area on the faucet can reach up to 122 °F.
- An incorrect installation of the flush valve can result in boiling water dripping from the outlet of the faucet.
- Avoid burns and scalding and pay attention when using hot water. The temperature of the hot water may be higher than 130 °F.
- Avoid burns and scalding and pay attention when using boiling water. The temperature of the water may be higher than 212 °F.

NOTICE

Risk of leaks: There is a risk of property damage due to water leakage!

- Regularly inspect the faucet and plumbing fittings for leaks, which can cause property damage and injury.
- To reduce the risk of property damage due to water leaks or flooding and to ensure optimum performance, read and follow the instructions before installing and using this system.

- Install and use the product as described in this manual. Make sure that all electrical, plumping and connections comply with national and local codes.
- Do not use the product for purposes other than those for which it is intended as described in this manual.
- Modifications in or on the device are only permitted by Topia or by qualified personnel trained by Topia.
- To ensure safe operation, use only the spare parts specified by the manufacturer. Otherwise, all warranty and liability claim against the manufacturer will be void.
- This appliance is not intended for use by persons (including children) with reduced physical, sensory, or mental capabilities unless they are supervised or instructed in its use by a person responsible for their safety.
- Children should be supervised to ensure that they do not play with the appliance.
- This appliance can be used by children aged from 8 years and above.
- Cleaning and maintenance should not be done by children.
- People who are not yet familiar with the system must be instructed how to use it safely and be informed of the potential hazards associated with the use of the boiling-water faucet.

- Restrictions of use for vulnerable individuals: According to the recommendations of the German Society for Hospital Hygiene and the Robert Koch Institute, drinking water from water dispensers is not recommended in health care facilities and nursing homes for the elderly, due to possible immune deficiencies of the patients caused by illness, therapy or age. Likewise, the consumption of tap water and thus also the use of water from drinking water dispensers is generally to be avoided for persons with immune deficiency.
- The device is designed for indoor operation in a closed room (usually a kitchen), above a sink. It may only be connected to a Topia under-counter system.
- Always use the hose set delivered with the device. The current one, available in the installation, cannot be re-used.
- If the signal cable to the faucet is damaged, the complete faucet must be replaced.
- Check the hose supply lines to the faucet once a year. A leak at those points will immediately lead to water damage. If necessary, contact the customer service.
- Tiled and stone sinks will not withstand boiling water; the difference in temperature can cause these to crack. Always pour the boiling water directly into the drain or in an extra vessel before drainage.
- Discoloration may arise if boiling water is allowed to splash onto the same spot on composite kitchen sinks on a constant basis.

3 Description of the product

3.1 Function of the product

The Topia Go range faucets feature a classic single-lever mixer function. Conditioned water can be activated safely with an electronic interface.

NOTICE

- The taste and appearance of conditioned water is dependent on many factors e.g. the mineralization and hardness degree of local tap water.
- Some faucet dripping is normal, especially together with carbonated water.

3.2 Name plate

The name plate is fitted on the hose of the faucet.

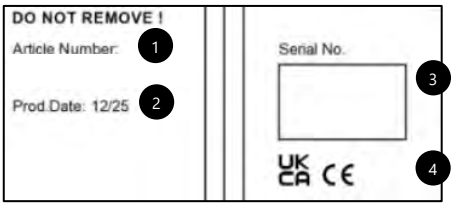

Figure 1: Nameplate

[1]	Article number
[2]	Production week/year
[3]	Serial number
[4]	Country specific mark

3.3 Signs attached to the product

Always keep safety signs and notes on the product in a legible condition. Replace damaged safety signs and notes immediately.

	Labeling tape cold water
	Labeling tape hot water

Figure 2: Signs attached to the product

4 Transport, handling and storage of the product

4.1 Delivery content

The package of the faucets contains the following components:

1) Faucet incl. installation parts

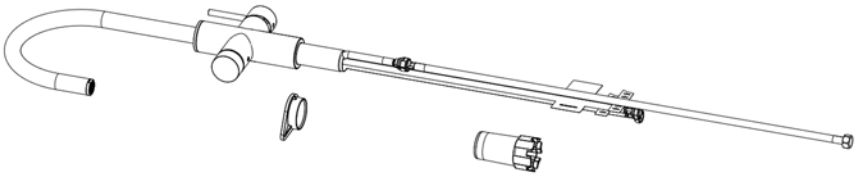

Figure 3: Delivery content

Please check the delivery for completeness. Should any parts be missing or damaged, please immediately notify the carrier, the insurance company or Topia Water in writing.

4.2 Packaging

The Topia faucet is delivered packed in foil and/or cardboard boxes.

- Dispose of the packaging materials at the recycling sites intended for this purpose. Please observe the valid national regulations for waste disposal.
- Labeling: Label attached to the outside of the box.

4.3 Transport

- Transportation only in original packaging by qualified personnel
- Avoid hard impacts and vibrations.
- Transport temperature: 4 °F to 140 °F, max. 20 K/hour fluctuation for a dry faucet
- Transport temperature: 40 °F to 140 °F, max. 20 K/hour fluctuation for a wet faucet.
- Transport air humidity: Relative humidity max. 75 %, non-condensing
- If the packaging is damaged, check the device for visible damage. Contact the responsible shipping company.

4.4 Storage

- Only store the device in the original packaging
- Storage temperature: 5 °F to 113 °F, max. 20 K/hour fluctuation
- Transport air humidity: Relative humidity max. 75 %, non-condensing
- Store the device for a maximum of 10 years.

5 Installation of the product

5.1 Installation requirements

The Topia Go range faucet can only be connected to a Topia under-counter unit with a compatible software version. This manual is only intended for the installation of the multifunctional faucet. For the installation of the under-counter unit, please refer to the operation manual supplied with the under-counter system.

Please check the following requirements before you start the installation:

- **Placement of the faucet:** For connecting the faucet to the under-counter unit, a borehole with a diameter of 1 - 3/8 in is required in the countertop or the kitchen sink. This should be available onsite. The material thickness of the countertop must not be greater than 1 - 9/16 in. We recommend a distance to the back wall of the kitchen cabinet from at least 1 - 5/8 in and a distance to the sink from at least 1 - 1/4 in from the center of the faucet hole.

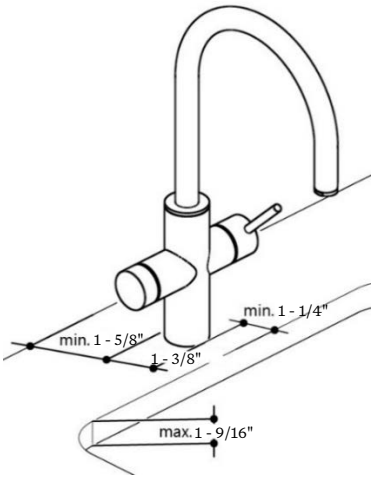

Figure 4: Space requirements

- **Ambient conditions:** The device may only be connected to a water supply with constant drinking water quality according to local specifications and a constant flow pressure between 15 and 140 psi at a mains water temperature of 50 °F to 150 °F.

- **Connections:** For the installation of the Topia faucet, a mains water connection is necessary. Angle valves must already be installed. Flush all pipes thoroughly before installation. Always use the hose set delivered with the device. The current one, available in the domestic installation, cannot be re-used.

- **Tools required for installation:** 1 × wrench size 3/4 in, carpet knife, tape measure, pencil. Depending on the existing infrastructure additional tools may be required. Never use serrated tools in order to avoid damage. Where necessary, always use the appropriate tools for tightening the coupling.

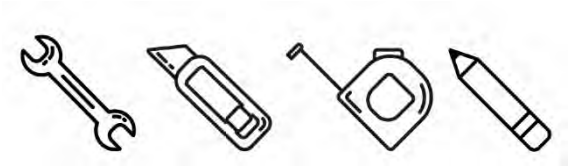

- **Cleanliness and hygiene during installation:** Contamination of water-bearing parts (e.g. seals, hose connections, threads, etc.) must be avoided at all costs during installation. We recommend thorough hand cleaning and avoiding skin contact with surfaces that will later be in contact with drinking water.

5.2 Installation scheme

The illustration below shows an exemplary installation scheme.

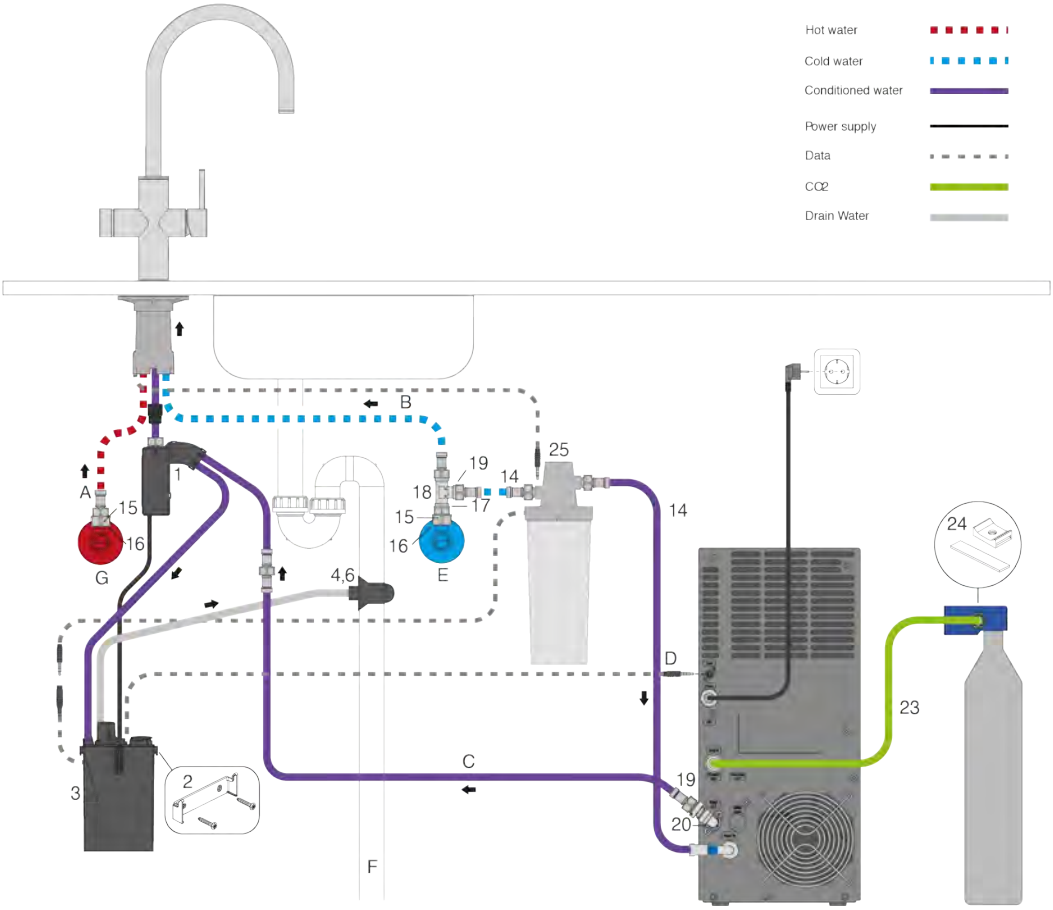

Figure 5: Installation scheme

[A]	Faucet hot water	[1]	faucet
[B]	Faucet cold water	[2]	Flat rubber gasket
[C]	Faucet conditioned water	[3]	Thrust washer triangle
[D]	Communication cable	[4]	Central nut
[E]	Cold water house installation		
[F]	Drain house installation		
[G]	Hot water house installation		

5.3 Installation procedure

We recommend installing the faucet in the following order:

(A) Prepare the Installation.
(B) Install the faucet.

5.3.1 (A) Prepare the Installation

		Description of Steps
1		Check if all installation requirements (see section 5.1 and 5.2) are fulfilled e.g. space, connections etc.
2	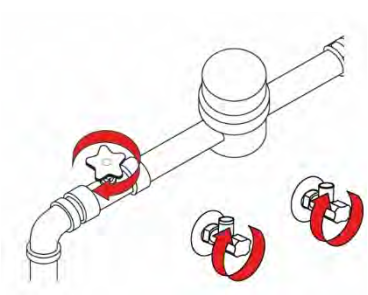	Turn off the mains water supply and close the angle valves. If not available, mark the existing cold and hot water connection.
3	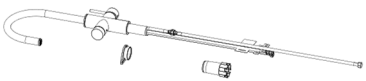	Unpack the faucet components, check the completeness of the contents (see chapter 4.1) and check all parts for any damage.
		NOTICE
		Particular attention must be paid when inspecting the O-rings and gaskets.

5.3.2 (B) Install the faucet

		Description of Steps
1	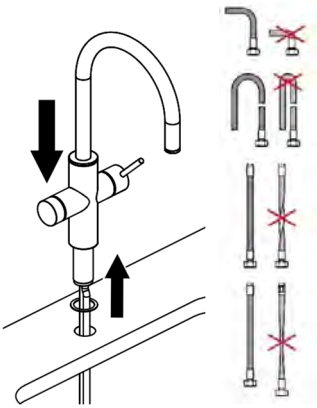	Push the flat rubber gasket (2) over the pipe from below and push the faucet (1) through the hole in the work surface. **NOTICE** Check that there is enough room for all the components and make sure the hoses are not bent, twisted or pulled tight. They should be routed without kinks.
2	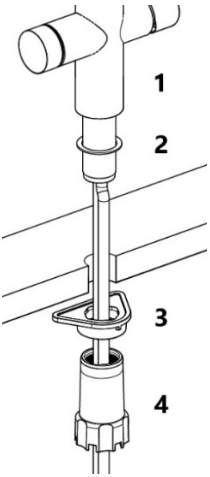	Adjust the position of the faucet (1) according to your wish. Push the thrust washer triangle (3) and the central nut (4) over the pipe from below and tighten the central nut (4) under sink by screwing it onto the faucet thread. **NOTICE** Hold the valve body on the faucet when you tighten the screw nut. It is important to fit the thrust washer triangle straight on the faucet thread.
3		In combination with a Topia under-counter system, please refer to the operation manual supplied with the under-counter system from here on.

6 Operation of the product

The control concept of the faucets can be different depending on the used variant. The Topia standard control concept is as follows.

6.1 Operation procedure with single lever mixer

The single lever mixer is used to regulate the temperature and flow rate of unfiltered cold and warm water.

		Description of Functions
1	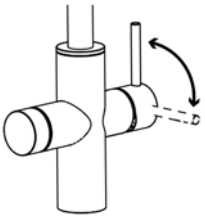	Turn the faucet lever upwards for cold water and downwards for hot water.
2	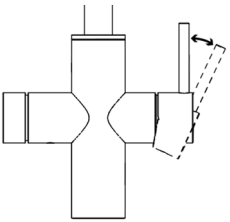	Open the faucet by moving the lever towards you. The further you move the lever towards you, the more water will flow from the faucet.
3	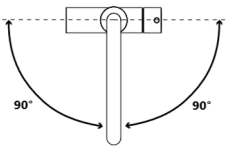	The faucet can be rotated up to 180 degrees.

6.2 Operation procedure with push-tun knob

Conditioned water functions with push/turn knob:

		Description of Functions
1	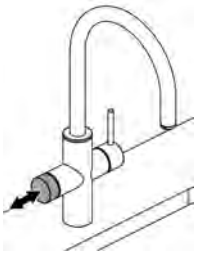	To activate the faucet if it is in standby mode push the knob briefly and re-lease. After a few seconds of not using the fau-cet it will switch automatically into the standby mode.
2	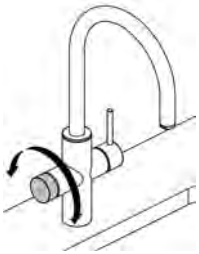	Choose the desired water type by turning the knob clockwise or counter clockwise until the corresponding color is displayed (see color coding).
3	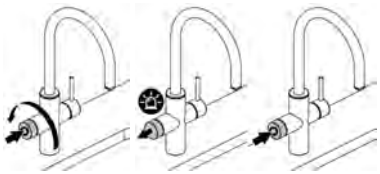 	Start the water dispensing by the fol-lowing control: • Boiling water: Push briefly -release, push (double press) • All other types: push briefly -release

4		Stop the water dispensing by the following control: • Boiling water: release • All other types: push briefly – release
5	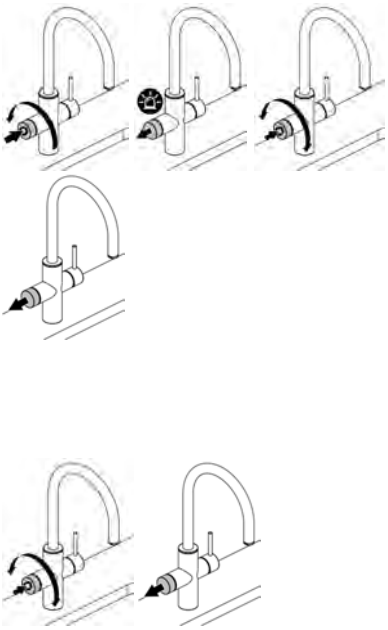	Start the water dispensing for preset values by the following control: • Boiling water: Push briefly - release, push - hold - turn clockwise or counterclockwise (1 step / 2 steps / 3 steps) to select the corresponding preset value - release • All other types: push – hold – turn clockwise or counter-clockwise (1 step / 2 steps / 3 steps) to select the corresponding preset value - release

6	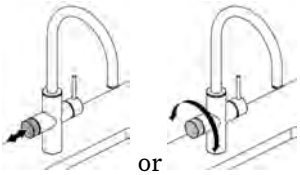	Stop the water dispensing by the following control: • All types: push briefly – release • Alternative: turn clockwise or counterclockwise

Change settings with push/turn knob:

		Description of Functions
1	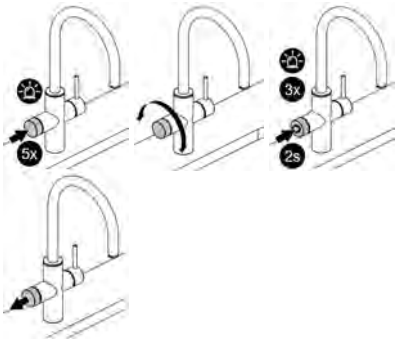	After a few seconds of not using the fau-cet it will switch automatically into the sleeping mode status with 50% led in-tensity. Adjust the dimming intensity by the following control: • Push - hold for 5 sec. (white LED goes out). • Choose the desired dimming intensity by turning the knob clockwise or counterclockwise until the corresponding color is displayed (see color coding). • Push and hold the knob for 2 sec. to confirm the selection (the LED flashes 3x to confirm the setting) – release.

2	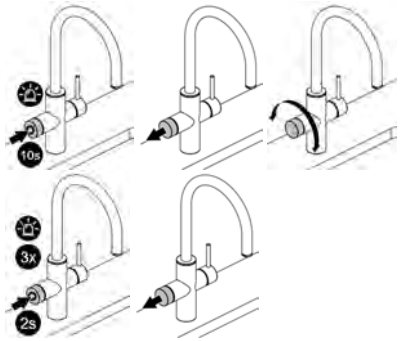	The standard setting of the water hardness to calculate the filter lifetime is 10° dH. Adjust the filter settings by the following control: • Push and hold the knob for 10 sec. (LED starts flashing violet). • Release the knob and choose the corresponding water hardness setting by turning the knob clockwise or counter clockwise (see color coding). • Push and hold the knob for 2 sec. to confirm the selection (the LED flashes 3x to confirm the setting) – release.

6.3 User interface with push-tun knob

(A) Operating

Status LED	Color Code	Meaning
Constant: Dimmed White		Standby mode: no function during rotation
Constant: Blue		Filtered, chilled, still water
Constant: Green		Filtered, chilled, sparkling water
Constant: Light Green		Filtered, chilled, medium sparkling water
Constant: White		Filtered ambient water
Constant: Red		Filtered Boiling water

(B) Filling and cleaning

Status LED	Color Code	Meaning
Flash: White		System is not ready as under-counter system is not filled
Pulse: White		Under-counter system filling or cleaning in progress

(C) Filter setting for water hardness

Status LED	Color Code	Meaning
Constant: Light blue		<10° dh -> filter lifetime approx. 12 month
Constant: Blue		10°-15° dh -> filter lifetime approx. 10 month
Constant: Green	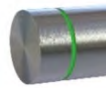	15°-20° dh -> filter lifetime approx. 8 month
Constant: Brown		>20° dh -> filter lifetime approx. 6 month

(D) Warnings

Status LED	Color Code	Meaning
Constant: Orange (50%)		Filter change: 1 month before end of filter lifetime in standby mode
Flash: Orange (slow)		Filter change: At end of filter lifetime in standby mode and when selecting filtered water
Flash: Orange (fast)		Flushing required after a filter change
Flash: Orange (slow)		Flushing in progress
Flash: Green / Orange		Pressure of CO2 cylinder <42 psi when sparkling mode is selected

After a filter change in the device, push the knob briefly to start the flushing process. The flushing process stops automatically after flushing with 5 liters or can be stopped manually by pushing the knob on the faucet.

(E) Failure

Status LED	Color Code	Meaning
Constant: Red (one single LED)		No communication to under-counter system
Flash: Red / Off		Complete failure of under-counter system
Flash: Red / White		Partial failure of under-counter system
Flash: Red / Orange		No filter / RFID tag not detected

In the event of an error, a more detailed failure code is shown on the keyboard of the under-counter system. Disconnect the power supply for at least 10 sec and restart the under-counter device. If that does not help, please contact the customer service.

6.4 Parameterization via Topia Water App

The device can be parameterized via an app to adjust different settings e.g. the flushing time of of boiling water, temperatures of different water types, eco mode, sparkling levels, etc. The Topia Water App can be downloaded via the Apple App Store and Google Play Store.

7 Maintenance of the product

7.1 Cleaning

- Clean the faucet by spraying some window cleaner on a damp cloth and then wiping the faucet.
- Black faucets will remain at its best if you only clean them with hot water and a cleaning cloth. Do not use cleaning products with carbon compounds, such as isopropanol, alcohol and ethanol, as these will damage the surface.
- Lime scale deposits can be prevented by drying the faucet after use.
- If lime scale deposits nevertheless occur, remove them with a citric acid-based cleaning agent. The cleaning agent must be removed without leaving any residue. Otherwise, these substances could damage the surface of the faucet.

NOTICE
Cleaning products such as dishwashing brushes, scouring sponges, all-purpose cleaners, acidic agents and solvents may damage the faucet.

When you notice that the flow of boiling water slows down, remove the faucet aerator to clean it. We recommend the following order:

		Description of Steps
1	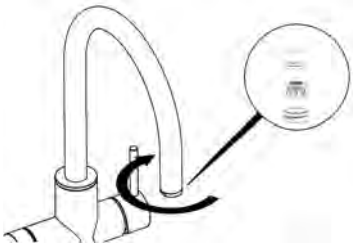	Unscrew the sleeve of the aerator.
		NOTICE
		Loosening can be made easier by wrapping an elastic band around the sleeve of the aerator. Take care that the sleeve of the aerator is not damaged using tools.

2		Leave the aerator to soak in vinegar or a citric acid-based descaling agent for around half an hour. Then remove any remaining limescale.
3	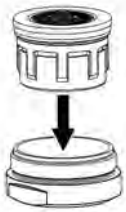	Place the faucet aerator into the sleeve.
4	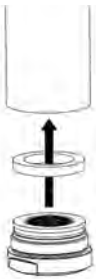	Place the gasket onto the faucet aerator.
5	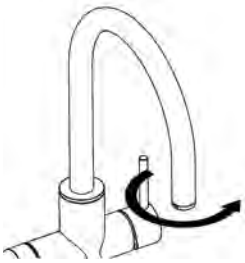	Screw on the sleeve finger-tight. **NOTICE** Tightening can be made easier by wrapping an elastic band around the sleeve of the aerator. Take care that the sleeve of the aerator is not damaged using tools.

Check connection and shower hoses periodically for the following:

- Watertightness
- Corrosion
- Mechanical damage

In case of damp or dripping hoses, hoses with rusty or oxidized surfaces or hoses that show signs of mechanical damage the complete faucet must be replaced.

7.2 Repairs

The device may only be repaired by qualified personnel. Opening the faucet by unqualified personnel voids the warranty.

To ensure safe operation, use only the spare parts specified by the manufacturer. Otherwise, all warranty and liability claims against the manufacturer will be void.

8 Removal and disposal of the product

8.1 Removal

We recommend the removal of the faucet in the following order:

		Description of Steps
1	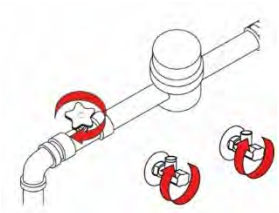	Turn off the mains water supply.
2	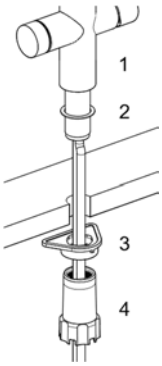	Unscrew the central nut (4) under sink and remove the thrust washer triangle (3). **NOTICE** Hold the valve body on the faucet when you untighten the central nut.
3	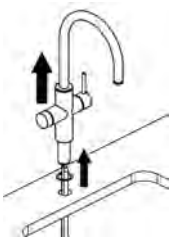	Pull the faucet (1) out of the hole in the work surface together with the flat rubber gasket (2).

4	 	Push the flat rubber gasket (2), the thrust washer triangle (3) and the central nut (4) over the pipe of the removed faucet and tighten the central nut (4) by screwing it onto the faucet thread. **NOTICE** The faucet must always be transported in appropriate packaging.

8.2 Disposal



This marking on the product, accessories or on the associated documentation indicates that the product and accessories must not be disposed of together with normal household waste at the end of their service life. Please dispose of this device and accessories separately from other waste to avoid harming the environment or human health through uncontrolled waste disposal. Help to dispose of the old device and accessory parts properly in order to promote sustainable recycling of material resources.

Private users should contact the dealer from whom the product was purchased or the relevant authorities to find out where they can take the waste equipment or accessories for environmentally friendly disposal. Commercial users should contact their supplier and proceed according to the terms of the sales contact. This product and electronic accessories must not be disposed of with other commercial waste.

9 Troubleshooting

Fault	Possible Cause	Solution
Water discharge at the faucet connection	Connecting pipe of cold/hot water loose	Tighten with an open-jaw spanner
	Connecting pipe of cold/ hot water union seal faulty or damaged	Replace the seal
Water discharge at a hose	Brittle or broken hose	Replace the leaking hose
Water cannot be drawn at the faucet	The corner valves of the water supply installation are shut off	Open the corner valves, check the working of the hot and cold water
	The main water valve is shut off	Open the main water valve
	Hoses are kinked	Straighten the kinked hoses
	Faucet is clogged	Inspect the faucet and clean the aerator
The faucet is without function (no LEDs lightning)	No connection between the faucet and the device	Plug in the cable connector of the communication cable securely - If already plugged in, remove and insert again
	The mains plug is not inserted.	Insert the mains plug into a GFCI-protected wall plug socket
	The mains plug or cable is damaged or defective	Contact customer service
	No power supply	Check the socket fuse, if any, and the GFCI
		Contact your electrical system installer

	The electronics in the device is defective	Contact customer service.
	Software problem	Disconnect the power supply for at least 10 sec and restart the device
The faucet shows an unknown color code	Failure of the device	Disconnect the power supply for at least 10 sec and restart the device.
		Contact customer service

10 Appendices

10.1 Technical data

The following specifications depend on the undercounter system that is installed.

General specifications	
Dispensing water types	Mains water: Unfiltered warm / cold water
	Conditioned water: Filtered ambient and filtered chilled / carbonated / boiling water
Spout design	Isolated spout
Operation	Mains water: Single-lever mixer function
	Conditioned water: Electronic interface - push/turn knob
Parametrization	Parametrization via app (BLE)
Mounting	Single hole mounting
Faucet hole size	1 - 3/8 in
Connection	Faucet warm water, cold water and undercounter water with flexible hose connections
	Communication cable with Jack-plug
Operating pressure	15 -140 psi
Water temperature	Mains water: 60 – 150 °F
	Conditioned Water: 39 – 208 °F
Max. surface temperature on outlet of faucet spout	122 °F
Flow rate with compensator	Mains water: approx. 1.5 gpm @ 42 psi
	Conditioned water: max. 0.5 gpm @ 42 psi

For specific information please refer to the data sheet of the individual faucet.

10.2 Drawing in mm

Multifunctional faucet with push/turn knob:

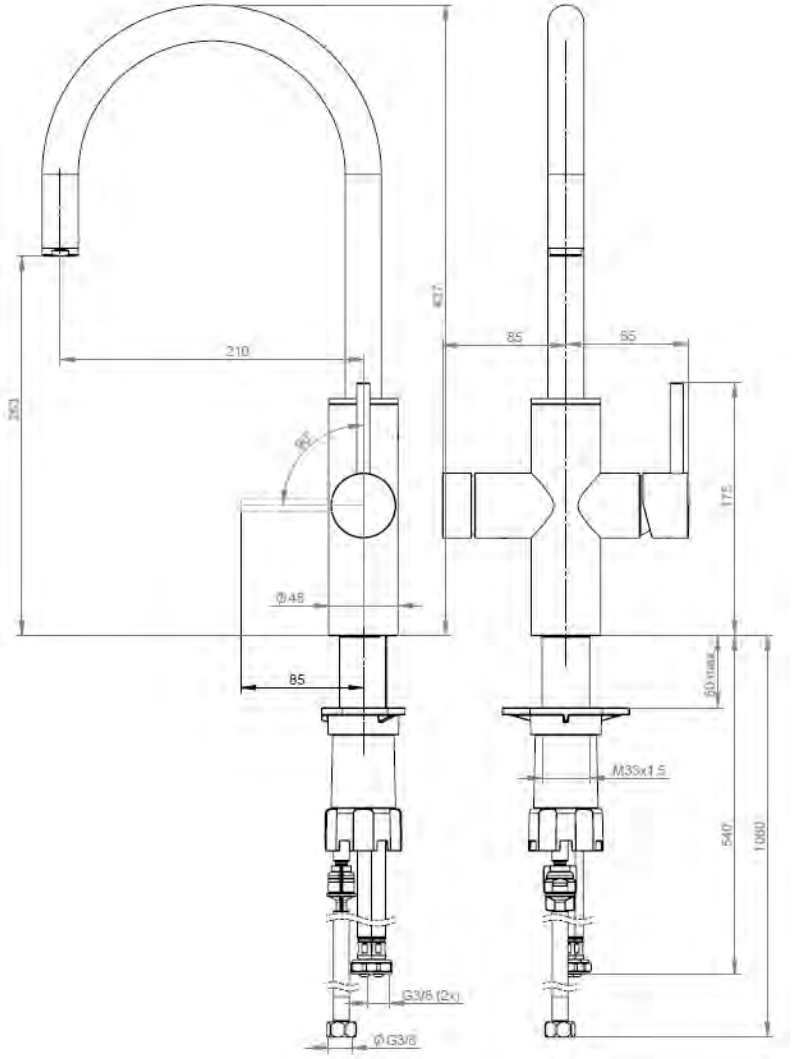

e: HELLO@TOPIAWATER.COM
TECHNICALSUPPORT@TOPIAWATER.COM
TOPIAWATER.COM
AFRICA | MIDDLE EAST | NORTH AMERICA

LIVWATER (Pty) Ltd REG NO. 2018/103877/07
VAT NO. 4100208711