TOPIA GO RANGE
Hygiene Guide

EXTERIOR CLEANING (EVERY DAY):

1. Topia recommends that you use disinfectant spray for the cleaning of your system. A mix of equal parts water and vinegar can be used to disinfect. Do not use micro-abrasive cleansers (e.g. Soft Scrub).
2. Wipe the entire faucet, undercounter systems and cabinet work surfaces with antibacterial wipes and sanitizing spray. Do not use coarse scouring pads (e.g. Brillo Pads, steel wool) which could scratch the surface of the faucet.
3. After completing each clean, dispense water for at least 10 seconds to flush any sanitizer out of the nozzles.
4. If your dispenser becomes soiled with residue, fingerprints, debris, etc. clean with hot soapy water using a non-abrasive cloth.
5. Keep the area surrounding the dispenser clean and sanitized. The entire machine should be kept free of dust, and the ventilation should not be obstructed, allowing free air flow around the machine.
6. If in doubt, please contact your Service Provider.



INTERNAL SANITIZING (EVERY 6 MONTHS / WHEN CLEANING LIGHT FLASHES RED):

For hygiene and health reasons, the Topia Go Undercounter system must be sanitized every 6 months to avoid the buildup of biofilm inside the system. We recommend internally sanitizing in the following order:

		Description of Steps
1	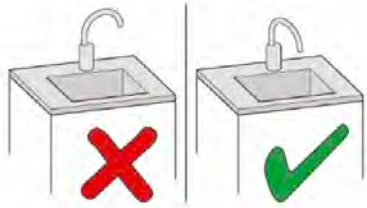	Make sure that the faucet is correctly aligned above the sink during the cleaning process and that the water can drain freely.
2	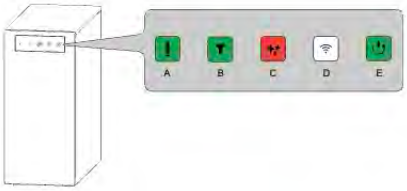	If a cleaning process is required, the LEDs on the user interface will light up as shown on the left.
3	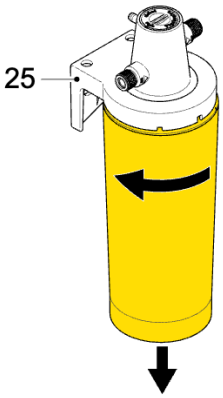	Turn the filter cartridge by approx. 90 degrees to the left and pull it down. This will unlock it from the filter head (25) and enable it to be removed. **Notice** It may happen that a small amount of expansion water leaks from the filter head. Please keep this in mind and place some kitchen paper or a towel underneath the filter head.
4	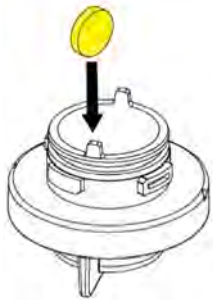	Insert one cleaning tablet (Bevi Tab Aqua – from your service provider) into the cleaning cup. **Notice** Using alternate cleaning tablets may result in the device not being cleaned properly.
5		Insert the cleaning cup into the filter head (25) and turn the cleaning cup by approx. 90 degrees to the right until it cannot be tightened any further.
6	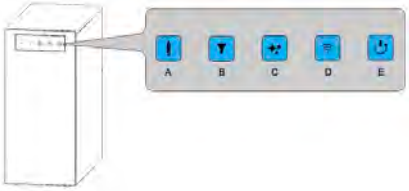	Press the Cleaning button (C) on the system for 5 seconds until all LEDs are flashing blue and until you hear 1 x beep sound to run the cleaning program.

		Description of Steps
7	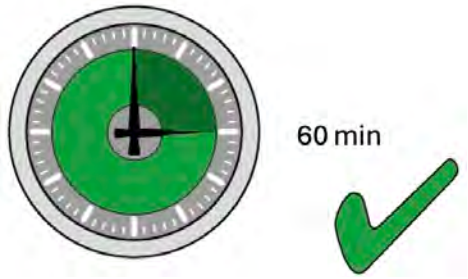	The cleaning program takes up to 60 minutes. In the meantime, a countdown will be visible on the user interface. First, all LEDs light up blue and then gradually switch off one by one. **Notice** Please do not interrupt the process by pressing any button or unplugging the device. Otherwise, the process will stop and needs to be finished with a 40-minute flushing process by pressing the blue flashing cleaning button (C) until you hear 1 x beep sound.
8	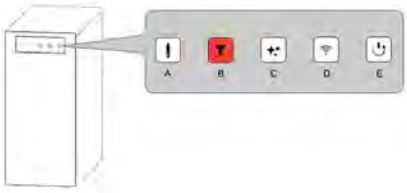	After the cleaning program, the LEDs on the user interface will light up as shown on the left.
9	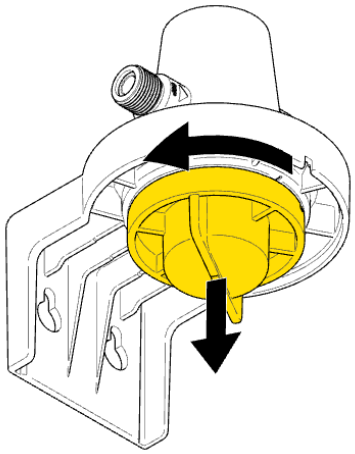	Turn the cleaning cup by approx. 90 degrees to the left and pull it down. This will unlock it from the filter head (25) and enable it to be removed. **Notice** It may happen that a small amount of expansion water leaks from the filter head. Please keep this in mind and place some kitchen paper or a towel underneath the filter head. The cleaning cup is required for the regular cleaning procedure and must be kept.
10	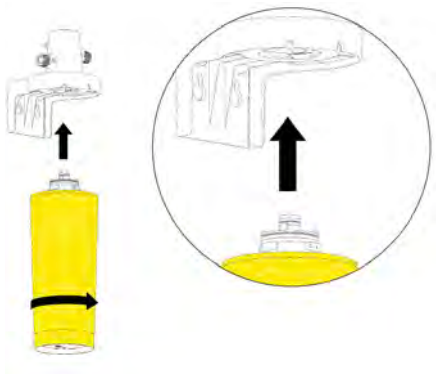	Insert the filter cartridge (new or a used one with remaining filter validity) into the filter head (25) and turn the filter cartridge by approx. 90 degrees to the right until it cannot be tightened any further. **Notice** After storage at a temperature below 32 °F the filter cartridge must first be stored at room temperature for at least 24 hours.

11	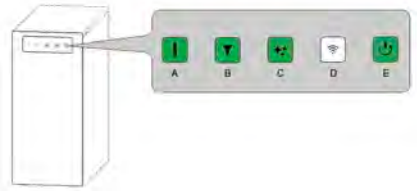	After a valid filter cartridge is inserted, press the filter button (B) on the system briefly (<2 s) until you hear 1 x beep sound. If a filter with valid RFID tag is used, the LEDs on the user interface light up as shown on the left. If the filter does not have a valid RFID tag, the Filter LED (B) lights up red.

If necessary, the safety basin (3) can be removed from its lid and placed in the dishwasher for cleaning.

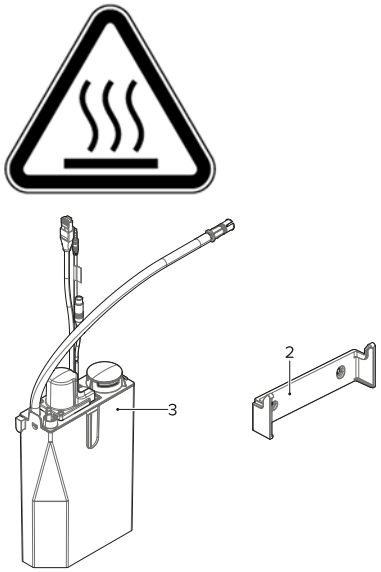

Warning

Danger of scalding!

- Empty the safety basin (3) with a command via the app to avoid scalding due to remaining water in the basin.
- Unplug the power cord of the device
- Remove the safety basin from the mounting bracket.
- Remove the safety basin from the lid by pressing the hook on the left side.
- Place the lid carefully into a container while the basin is in the dishwasher. Make sure that the level sensors, hoses and cables on the lid are not damaged.

Furthermore, we recommend cleaning the ventilator fan of the Topia Go Undercounter systems once a year with a brush or a vacuum cleaner.